Voltage Current Characteristics of Slide-wire Rheostat and Diode

For a resistor that obeys Ohm's law, a graph of current as a function of potential difference (voltage) is a straight line. If the sign of the potential difference changes, so does the sign of the current produced.

In devices that do not obey Ohm's law, the relationship of voltage to current may not be a direct proportion. In the direction of positive current and voltage of a diode, current increases nonlinearly with voltage.

Objectives

1. Learn the use of commonly used electrical instruments such as power supplies, slide-wire rheostat, and meters for measuring electricity.
2. Learn circuit connection.
3. Learn to measure the current-voltage relationship of the diode.

Apparatus

DC power supply, slide-wire rheostat, ammeter, voltmeter, resistor, diode (1n4004).

Theoretical principles

1. Slide-wire rheostat as a current limiter

The slide-wire rheostat is used as a current limiter, as shown in Fig. 1. Omitting the connection error of the ammeter, when the sliding contact C is at the end B, the current in the circuit is $I = \frac{V}{R_L + R_{AC}}$. When the sliding contact C is at the end A, the current in the circuit is $I_0 = V/R_L$, which is the maximum. Hence

$$\frac{I}{I_0} = \frac{R_L}{R_L + R_{AC}} = \frac{R_L/R}{R_L/R + R_{AC}/R}$$

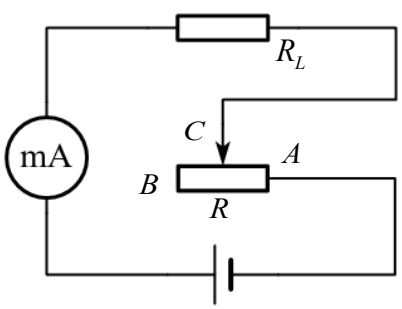

Fig. 1 Current limiting circuit

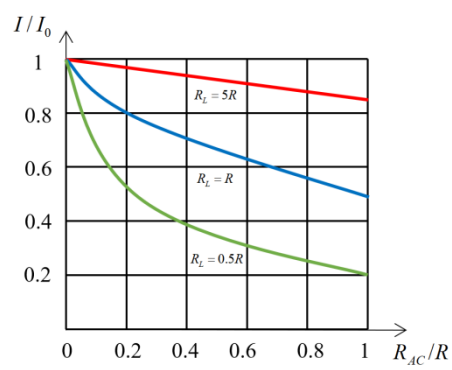

Fig. 2 Current limiting characteristics

where R is the total resistance between A and B. Draw with R_{AC}/R (R_{AC} is the resistance between A and C) as the X-axis and I/I_0 as the Y-axis, as shown in Fig. 2. For different values of R_L, as the sliding contact C changes, the changing rule of $I/I_0$is different.

If we take the reciprocal of both sides of the above equation, we have

$$\frac{I_0}{I} = \frac{R_L/R + R_{AC}/R}{R_L/R} = 1 + \frac{R_{AC}/R}{R_L/R} \ldots\ldots (1)$$

For a set of measurements maintaining R_L/R, I/I_0 should be theoretically linear with R_{AC}/R.

2. Slide-wire rheostat as a voltage divider

The slide-wire rheostat is used as a voltage divider, as shown in Fig. 3. R_{L} is the load resistor with a voltage of V_{AC}. Omitting the connection error of the voltmeter, the voltage output is

$$V = \frac{V_0}{R_{\mathrm{BC}} + \frac{R_{\mathrm{AC}}R_{\mathrm{L}}}{R_{\mathrm{AC}} + R_{\mathrm{L}}}} \times \frac{R_{\mathrm{AC}}R_{\mathrm{L}}}{R_{\mathrm{AC}} + R_{\mathrm{L}}}$$

where R_{BC} is the resistance between B and C, $R_{\mathrm{BC}} = R - R_{\mathrm{AC}}$. V_0 is the voltage between A and B, which is always equal to the output voltage of the power supply and is also the upper limit of V. Divide the left and right ends of the above equation by V_0, and divide the numerator and denominator at the right end by R and R_{L}. Then

$$\frac{V}{V_0} = \frac{R_{\mathrm{AC}}R_{\mathrm{L}}}{R_{\mathrm{AC}}R_{\mathrm{BC}} + R_{\mathrm{AC}}R_{\mathrm{L}} + R_{\mathrm{BC}}R_{\mathrm{L}}} = \frac{R_{\mathrm{AC}}/R}{(R_{\mathrm{AC}}/R)(R_{\mathrm{BC}}/R_{\mathrm{L}}) + R_{\mathrm{AC}}/R + R_{\mathrm{BC}}/R}$$

Draw with R_{AC}/R as the X-axis and V/V_0 as the Y-axis, as shown in Fig. 4.

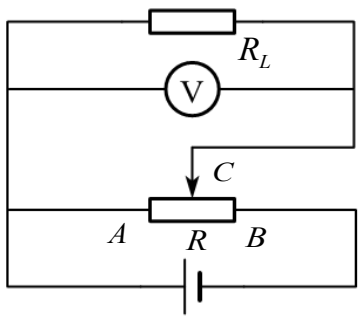

Fig. 3 Voltage dividing circuit

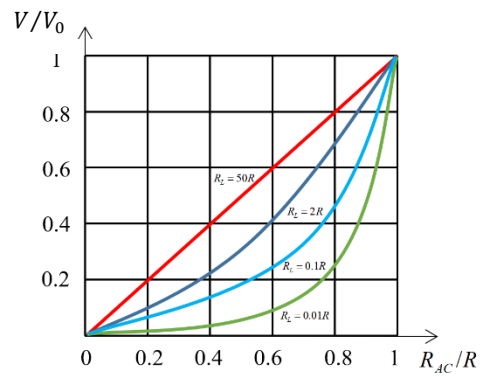

Fig. 4 Voltage dividing characteristics

For different values of R_{L}, as the sliding contact C changes, the changing rule of $I/I_0$is different.

3. Measurement of the current-voltage relationship of the diode

The experimental circuit is shown in Fig. 5. In the vicinity of the ammeter, it is called the ammeter internal connection method to connect according to the dash line, and the ammeter external connection method to connect according to the solid line.

Due to the internal resistance of both the voltmeter and the ammeter (noted as R_{V} and R_{A} respectively), the voltage on the diode V_{D} and the current through the diode I_{D} cannot be accurately measured simultaneously in both of the cases. Correction must be made.

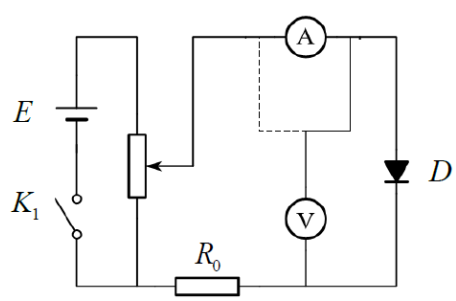

Fig. 5 Current-voltage measuring circuit

(1) For the ammeter internal connection method, the voltage output of the voltmeter V is the total voltage of the diode and the ammeter in series. Hence

$$I_D = I, V_D = V - IR_A = V - IR_D \frac{R_A}{R_D}$$

So when the resistance of the diode R_D is large, much greater than the ammeter R_A, $R_A/R_D \ll 1$, the systematic error of internal connection is smaller.

(2) For the ammeter external connection method, the current output I of the ammeter measured by the ammeter is the sum of the currents flowing through the diode and the voltmeter. Hence

$$V_D = V, I_D = I - \frac{V}{R_V} = I - \frac{V}{R_D}\frac{R_D}{R_V}$$

So when the resistance of the diode R_D is smaller, much smaller than the voltmeter R_V, $R_D/R_V \ll 1$, the systematic error of external connection is smaller.

Contents

1. Measure the current limiting characteristics

Connect the current limiting circuit as shown in Fig. 1, with R_L/R taken as 0.5, 1, and 5. Adjust the maximum current to a predetermined value by adjusting the power supply voltage. Observe the change of output current with the movement of the sliding contact C of the slide-wire rheostat. Measure the currents separately, fill in Table 1.

2. Measure the voltage dividing characteristics

Connect the voltage dividing circuit as shown in Fig. 3, using a resistor as the load resistor. Take R_L/R as 0.1, 1, and 10. Observe the change of output voltage with the movement of the sliding contact C of the slide-wire rheostat. Measure the voltages separately, fill in Table 2.

3. Measure the current-voltage relationship of the diode

Connect the circuit as shown in Fig. 5. **Only external connection is in use.** Adjust the voltages across the diode to the corresponding values in Table 3 with the voltage dividing characteristics of the slide-wire rheostat and the voltage output of the power supply. Measure the currents in the diode, and fill in Table 3.

Precautions

1. The DC power supply voltage should not be greater than 6V, unless necessary to turn it up.
2. Ensure that the voltage and current do not exceed the range of the meters.
3. Before testing, slide the sliding contact C of the slide-wire rheostat and take a look at the displays.

Data Collection

1. Measure the current limiting characteristics

Table 1 Current measurement

Current output I(mA)		Position of the sliding contact R_{AC}/R					
		0.0	0.2	0.4	0.6	0.8	1.0
R_L/R	0.5						
	1						
	5						

2. Measure the voltage dividing characteristics

Table 2 Voltage measurement

Voltage output V (V)		Position of the sliding contact R_{AC}/R					
		0.0	0.2	0.4	0.6	0.8	1.0
R_L/R	0.1						
	1						
	10						

3. Measure the current-voltage relationship of the diode

Table 3 Measurement of the current-voltage relationship of the diode

V(V)	0.40	0.50	0.54	0.58	0.59	0.60
I(mA)						
V(V)	0.61	0.62	0.63	0.64	0.68	0.72
I(mA)						

Data Analysis

1. The current limiting characteristics

(1) Draw with R_{AC}/R as the X-axis and I/I_0 as the Y-axis. Based on the analysis of the figure, what is the difference in the linear adjustment performance of the slide-wire rheostat with the change of R_L/R.

(2) Draw with R_{AC}/R as the X-axis and I_0/I as the Y-axis for R_L/R is 0.5, 1, and 5. Fit the three graphs to straight lines by the least square method, and calculate R_L/R back according to equation (1). Then compare them with the known set value.

2. The voltage dividing characteristics

Draw with R_{AC}/R as the X-axis and V/V_0 as the Y-axis. Based on the analysis of the figure, what is the difference in the linear adjustment performance of the slide-wire rheostat with the change of R_L/R.

3. The current-voltage relationship of the diode

Draw with voltage as the X-axis and current as the Y-axis, and describe the current-voltage relationship of the diode.

In this experiment, the indication error of the instruments Δ_m is NOT in use.

Questions

1. What is the deviation of the R_L/R calculated by equation (1) related to the settings? What causes that?
2. Why do we only use external connection in the measurement of the current-voltage relationship of the diode?